COALBROOK

ZU1006

DECK MOUNTED 3 HOLE BASIN
MIXER WITH ROUND SPOUT

DATE: 02/09/21 REVISION: A

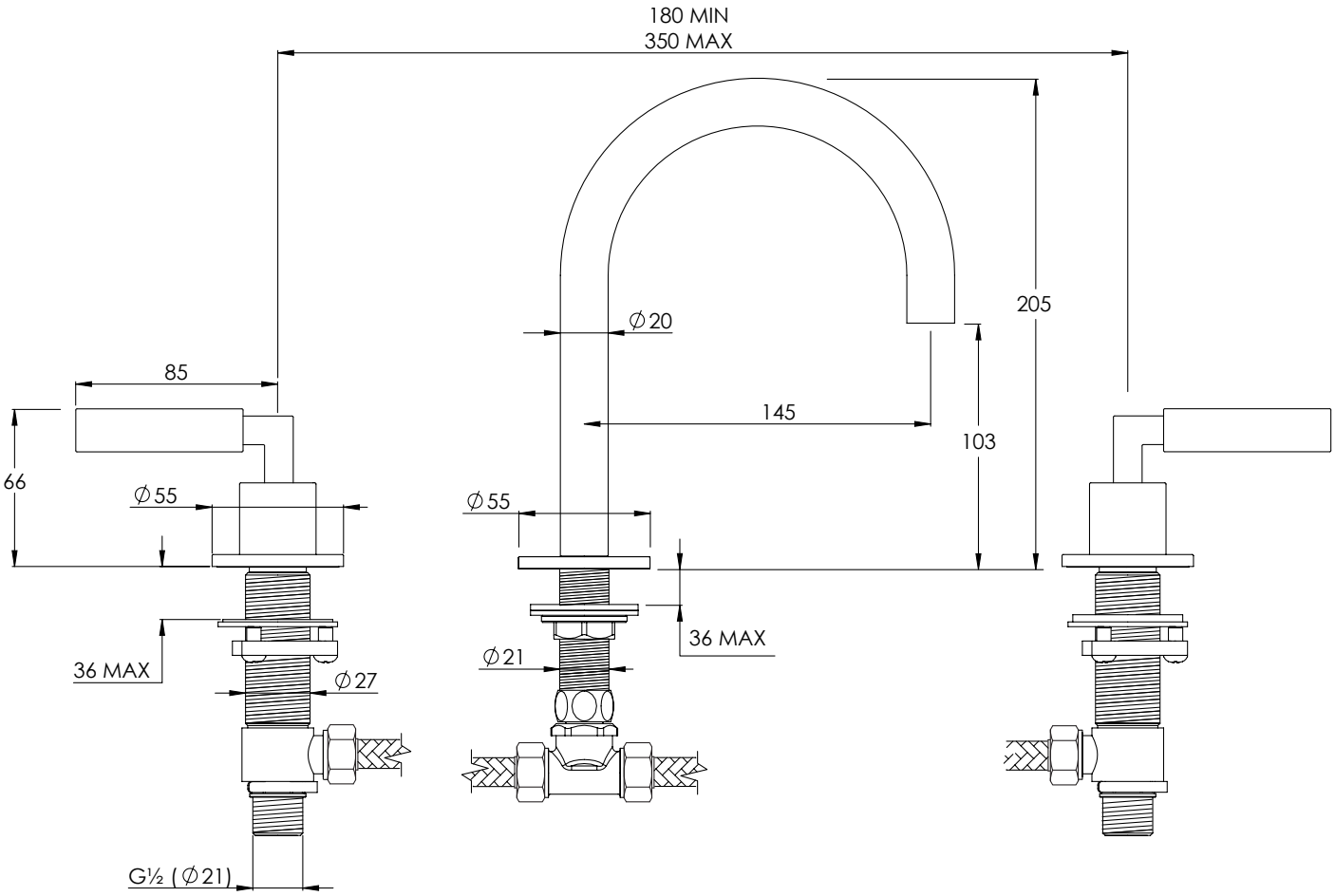

DIMENSIONS IN MILLIMETRES

WHILST EVERY EFFORT IS MADE TO ENSURE THE ACCURACY OF THESE DATA SHEETS THEY ARE SUBJECT TO CHANGE WITHOUT NOTICE AS PART OF THE COMPANY'S PRODUCT DEVELOPMENT PROCESS